blabla
- CUBE -

ASSEMBLY INSTRUCTIONS

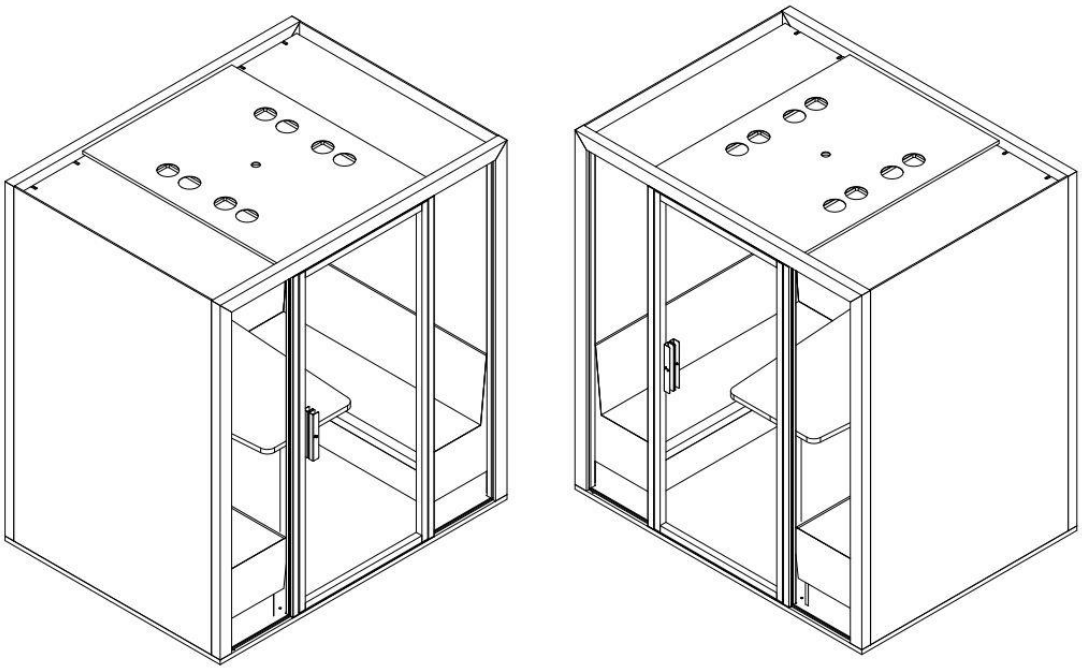

DUO - QUATTRO

2023 GENERATION BOOTHS

Fabriqué en France

JANUARY 2023

ESSENTIAL TOOLS

Round head hexagon spanner

Necessary to tighten and remove booth assembly systems.

Suction pads

Tools essential for assembly of side panels of the booth

For any questions or assistance regarding assembly call
04 75 78 44 44

SAFETY INSTRUCTIONS

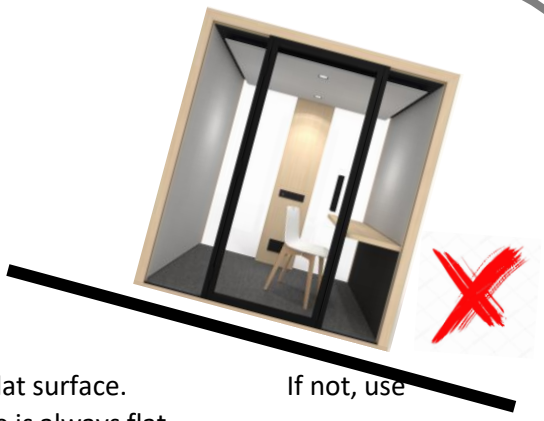

Make sure that your Blabla-Cube is always on a flat surface. If not, use blocks to ensure that the base is always flat.

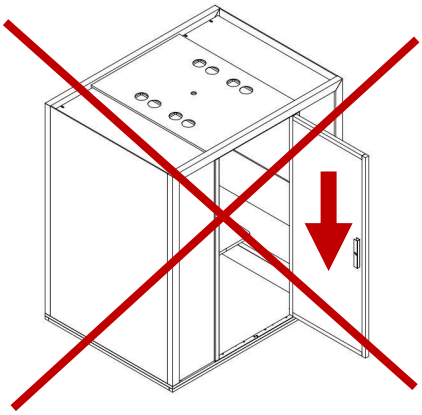

To not hang to any door or apply any vertical pressure.

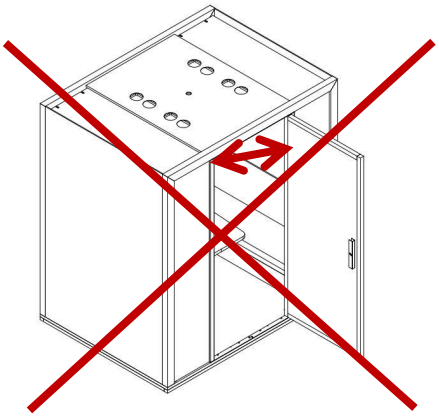

Do not shake the booth

Do not sit on the table

To not apply any load in excess of 6 kg on the table

Do not smoke in the booth

Electric sockets in the booth should only be used in the presence of a person.

Maintenance: wash down the external walls of the booth with a damp cloth. Do not use any solvent. If necessary, dry clean fabrics.

ASSEMBLY INSTRUCTIONS

Please read these instructions carefully

Assembly time 60 minutes

3 people

A

B

C

D

E

F

G

H

J

K

L

I

NOMENCLATURE

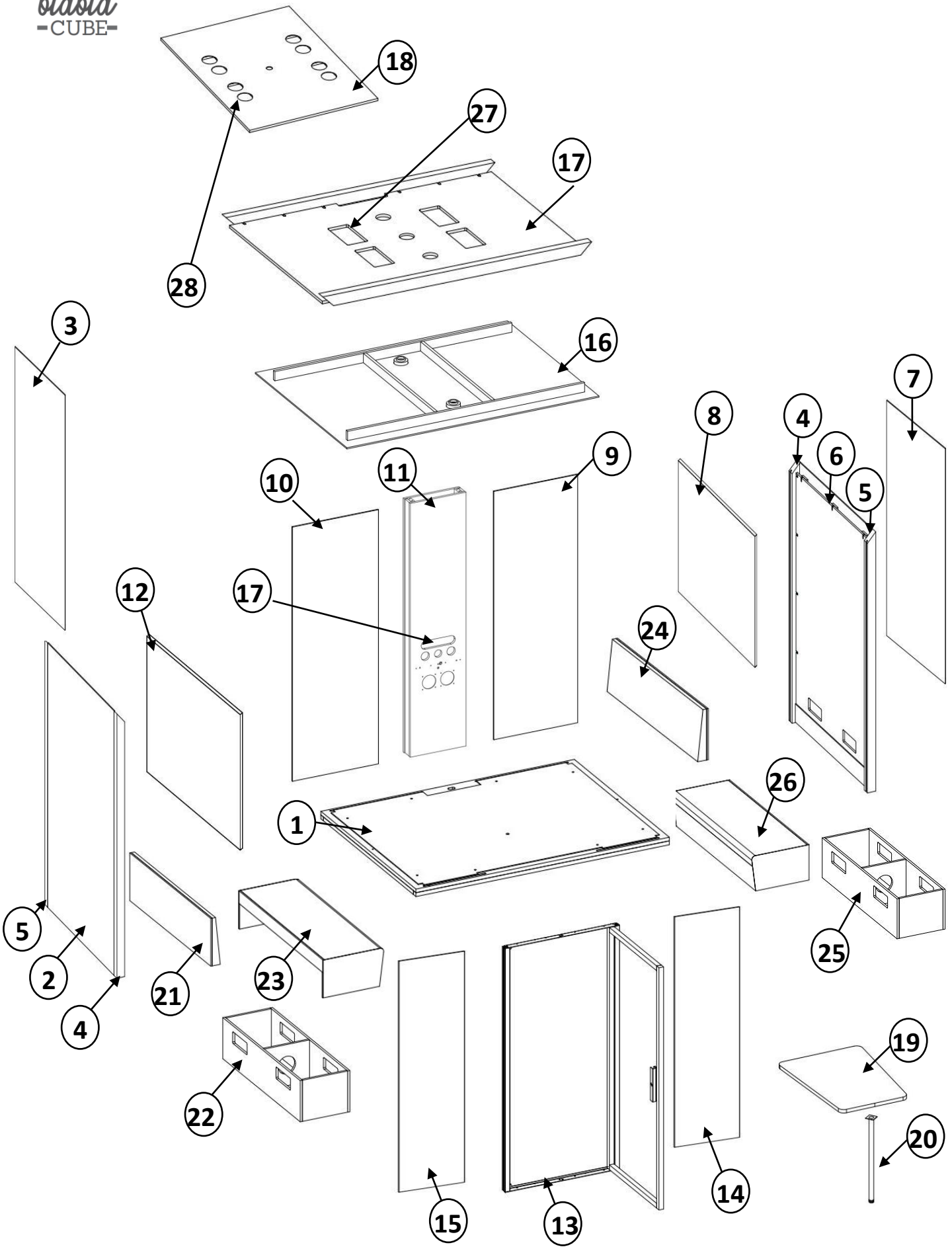

NOMENCLATURE TABLE

PART NUMBER	PART	PART NUMBER	PART
1	BASE	**16**	FALSE CEILING
2	LEFT SIDE PANEL	**17**	CEILING
3	OUTSIDE LEFT PANEL	**18**	CEILING COVER
4	4 RIGHT UPRIGHT	**19**	TABLE
5	4 LEFT UPRIGHT	**20**	TABLE SUPPORT
6	RIGHT SIDE PANEL	**21**	LEFT HIGH BENCH
7	OUTSIDE RIGHT PANEL	**22**	LEFT HIGH BENCH
8	INSIDE RIGHT FABRIC COVER	**23**	LEFT HIGH BENCH
9	RIGHT REAR PANEL	**24**	RIGHT HIGH BENCH
10	LEFT REAR PANEL	**25**	RIGHT BENCH BASE
11	COLUMN	**26**	RIGHT BENCH SEAT
12	INSIDE LEFT FABRIC COVER	**27**	LED SPOT LIGHT
13	FRAME + DOOR UNIT	**28**	VENTILATOR
14	FRONT RIGHT GLASS PANEL	**29**	4 SOCKET UNIT
15	FRONT LEFT GLASS PANEL		

ASSEMBLY

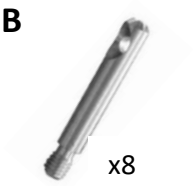

1

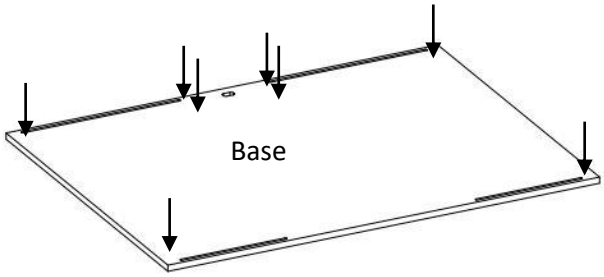

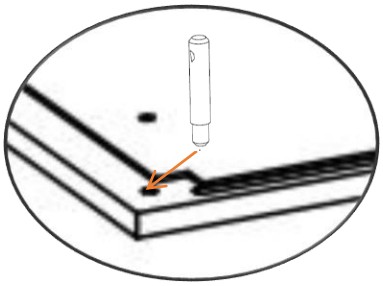

Place parts marked **B** into the base. Using a screwdriver, tighten parts marked **B**.

Place the dowels for the upright sections perpendicular to the booth opening

Place the dowels for the column parallel to the booth opening

2

1. Position the base in the future site for the booth. Using a spirit level, ensure the floor is flat.

2. Use the adjustment screws to ensure the base is perfectly flat.

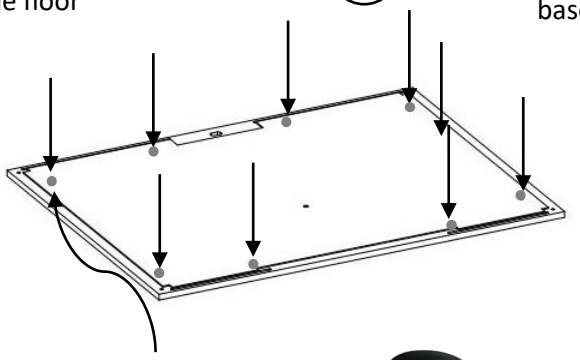

3. Ensure the covers are in place after the previous step.

ASSEMBLY

K X2

3

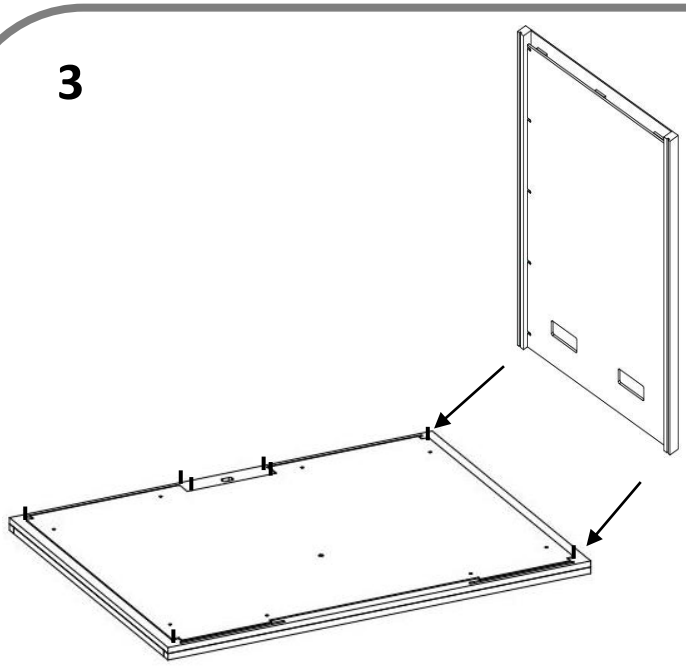

Insert the side panel into the metal dowels and lock all parts marked **K**

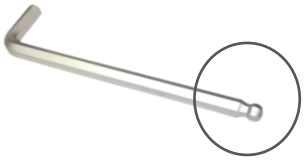

Use the round head hexagon spanner

4

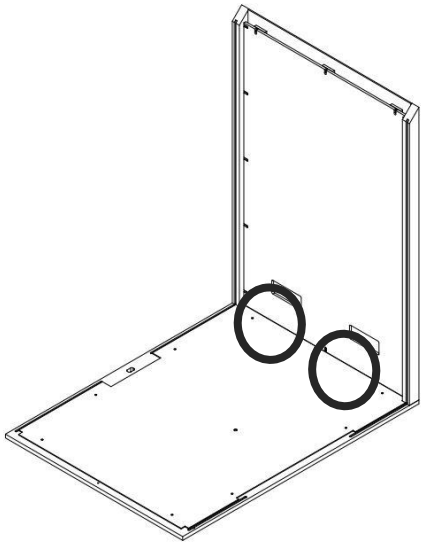

Lock the ‘cabineo’ from within the booth

ASSEMBLY

5

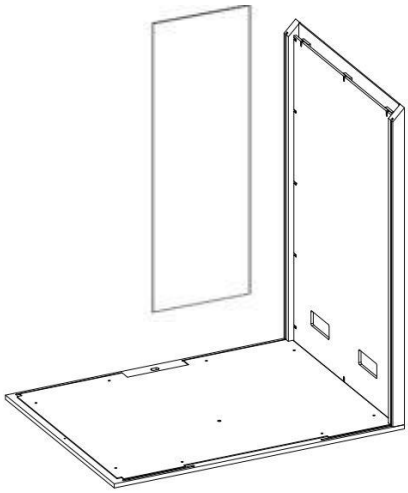

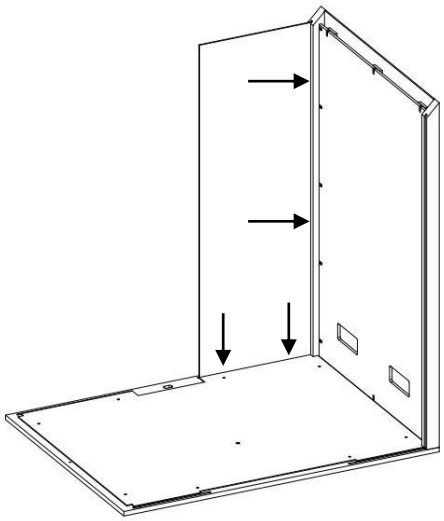

Insert the rear panel of the booth (glass of full height panel) into the rail of the **upright** and the **base**.

Insert the glass panels into the rear of the panels.

K X4

6

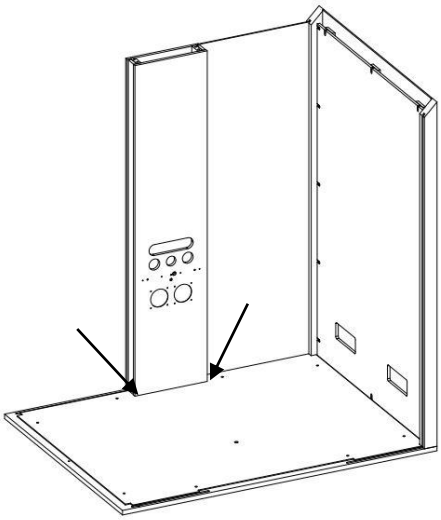

Insert the column into the metal dowels and lock all parts marked **K**

ASSEMBLY

7

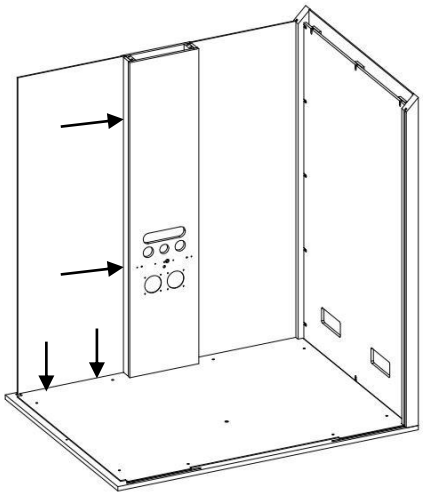

Insert the glass panels into the rear of the panels.

Insert the rear panel of the booth (glass of full height panel) into the rail of the **upright** and the **base**.

Use the round head hexagon spanner

K X4

8

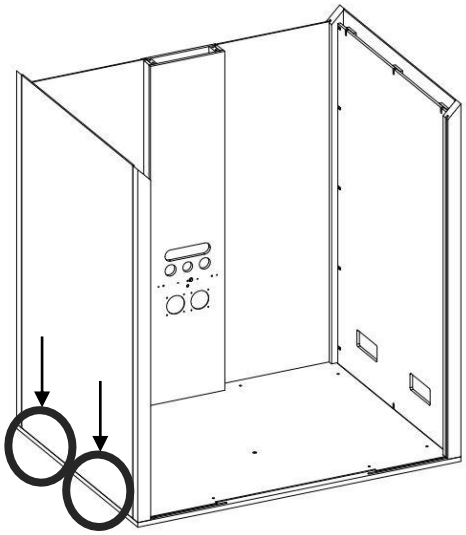

Lock the ‘cabineo’ from within the booth

Insert the left side panel into the metal dowels and lock all parts marked **K**

ASSEMBLY

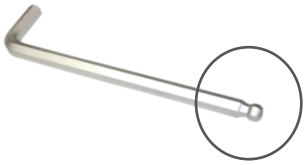

Use the round head hexagon spanner

9

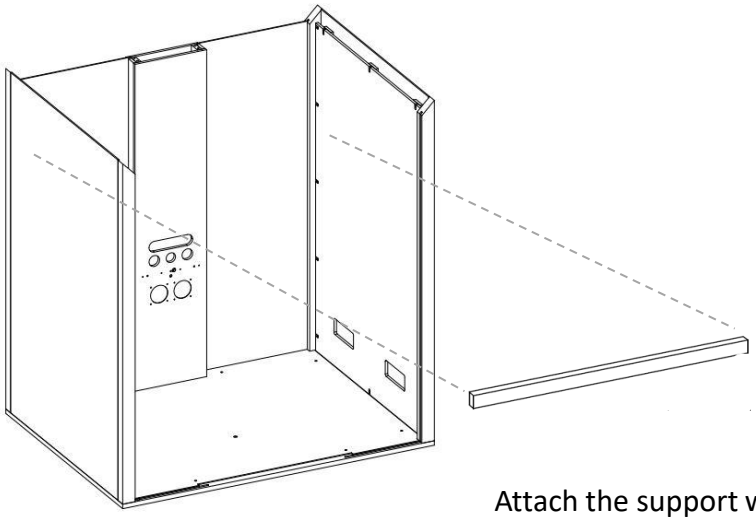

Lock the ‘cabineo’ from within the booth

Attach the support with the ‘cabineo’ to the rear of the booth on both sides.

10

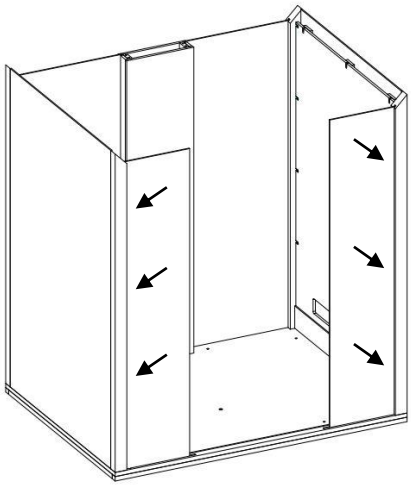

Insert the glass panels into the rear of the panels.

Insert the two front glass panels into the runners on the base and the uprights.

ASSEMBLY

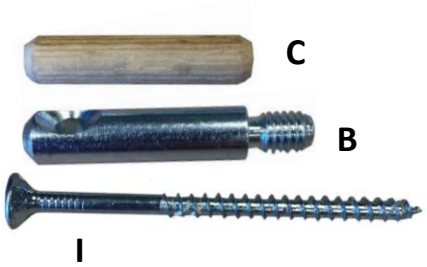

11

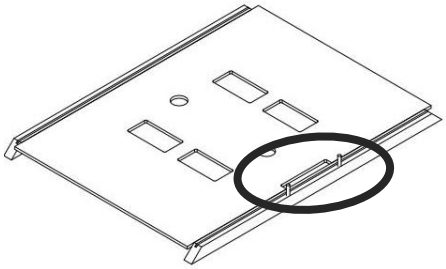

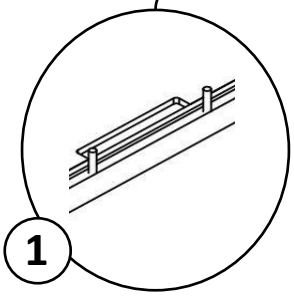

1 Attach the dowels into the cover

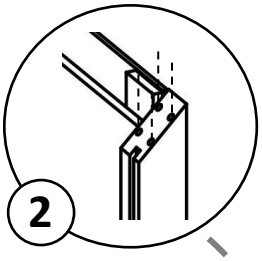

2 Place the pins into the uprights.

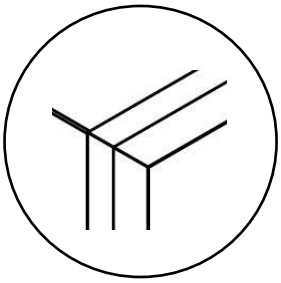

Ensure that the uprights and the cover are properly connected.

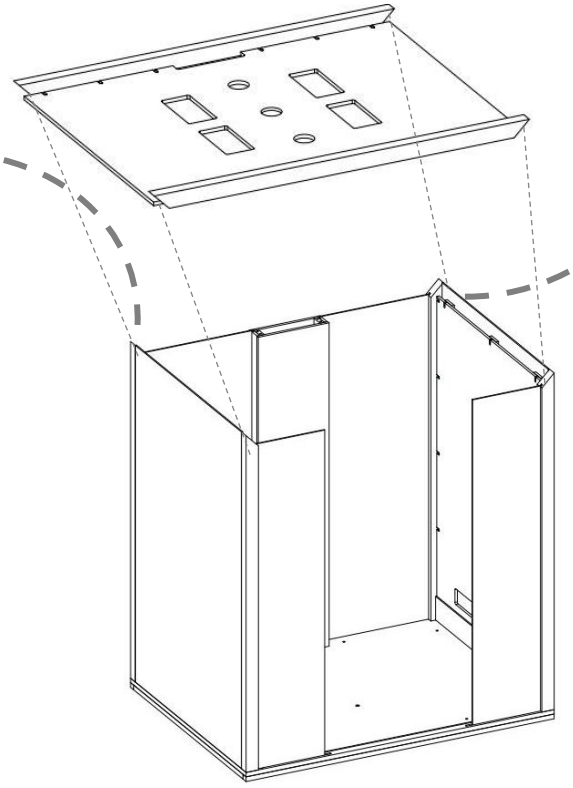

3 Place the Cover properly onto the booth.

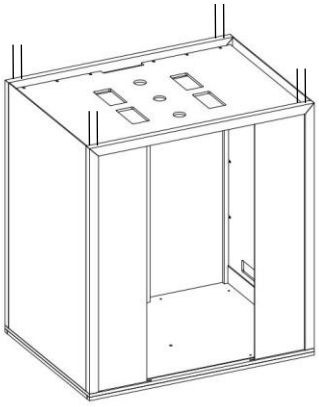

4 Screw the ceiling from the top of the cross beams using parts marked **I**

ASSEMBLY

12

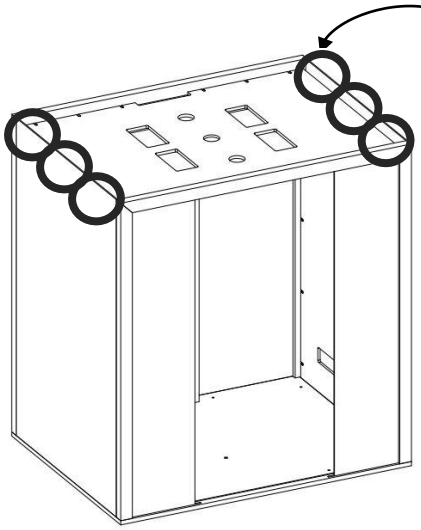

1

Lock the ‘cabineo’ from within the booth

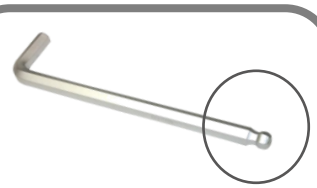

Use the round head hexagon spanner

2

Lock the cover by tightening the dowels at the rear of the column

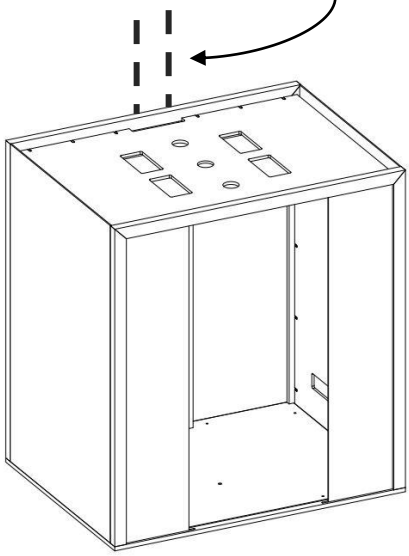

K

X2

ASSEMBLY

13

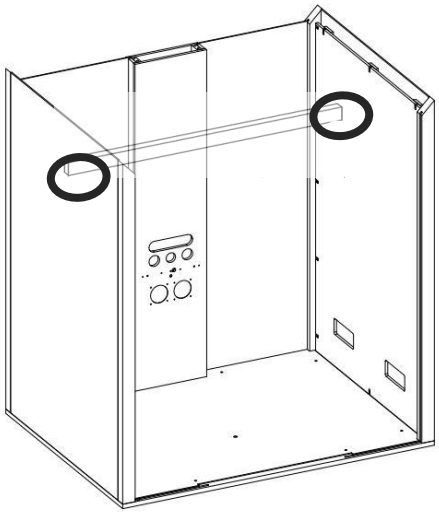

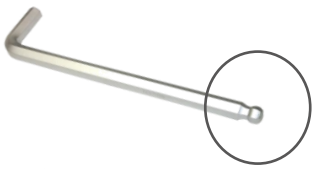

Use the round head hexagon spanner

Lock the ‘cabineo’ from within the booth

Remove the support by untightening the ‘cabineo’ to the rear of the booth on both sides

14

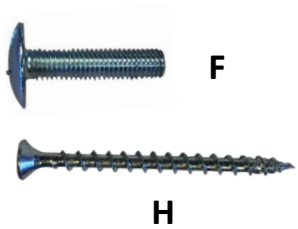

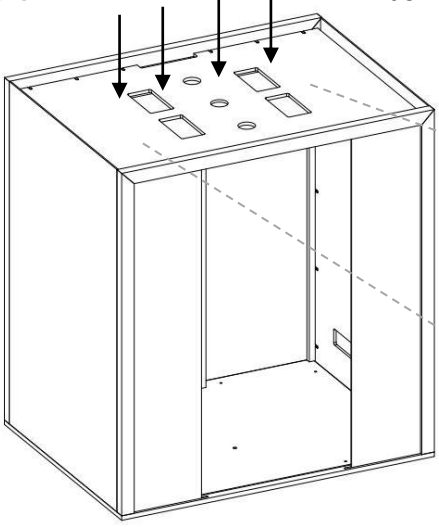

1 Attach the false ceiling to the cover using parts marked **F**

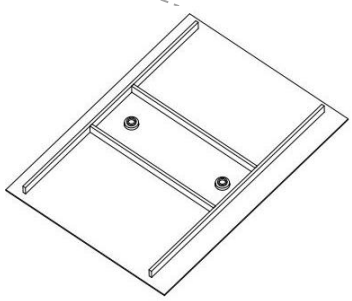

2 Screw the false ceiling from the top of the cover using parts marked **F** and **H**

ASSEMBLY

15

Porte Réversible !

NB: At this stage, you can then choose the direction in which the door will open. Once seated in position, this can be positioned in both directions.

NEVER REMOVE THE HINGES

1 Remove the frames

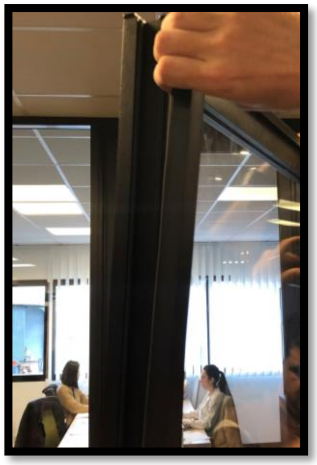

CLICK !

Remove the frames from both sides before placing the structural frame + door.
You may need to use some strength to lock into place.

2 Position the frame

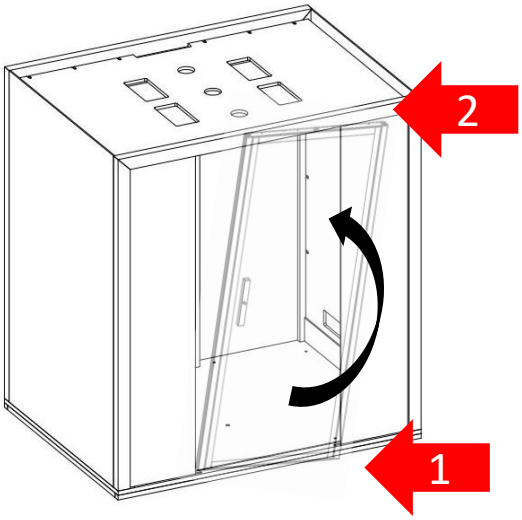

Place the frame + door onto the base section first and then switch and insert the top section.

3 Close the clips

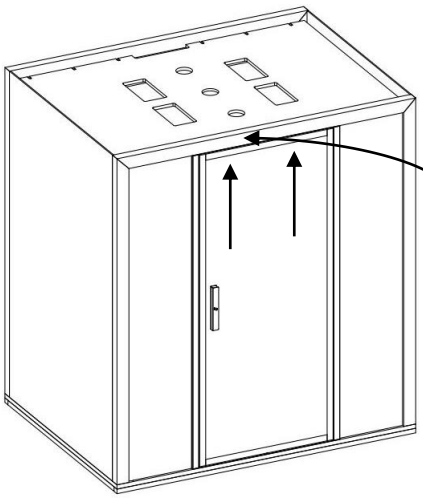

CLICK!

The frame + door unit is then fully inserted once you hear the click

ASSEMBLY

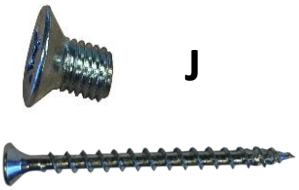

4 Insert the frames

CLICK!

Place the frames from within the booth.
You may need to use some strength to

5 Screw the frame into place

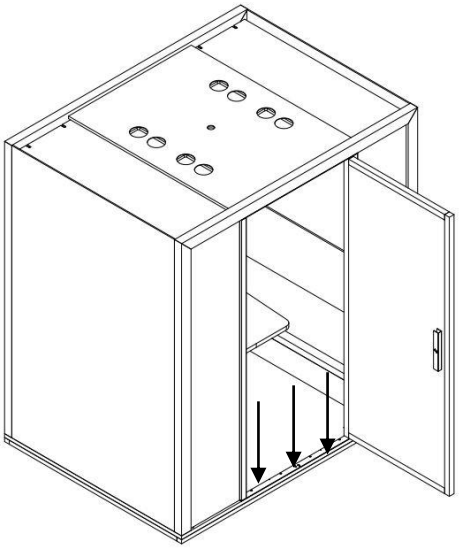

Open the door and screw the outer frame into the insert of the base using parts marked **J**

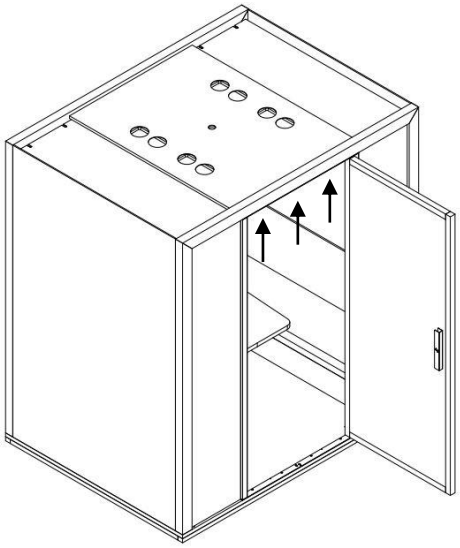

6 Ensure the holes are in line with the holes on the uprights and cross beams, to screw in place using **H**

7 Stick the black stickers over all screws.

ASSEMBLY

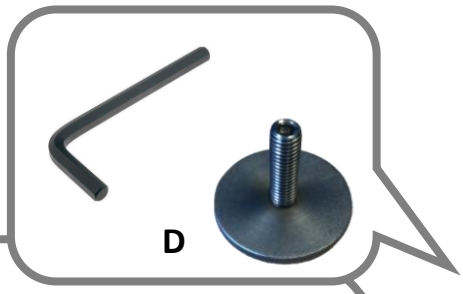

16

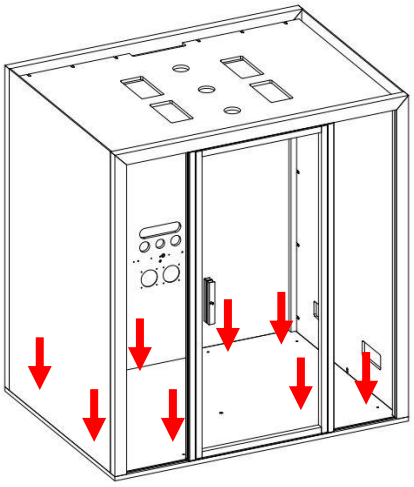

Adjust the door

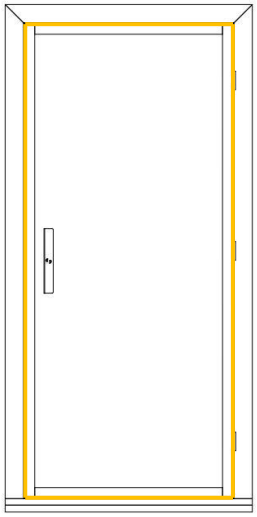

Ensure that the door is adjusted identically around the entire surround

17

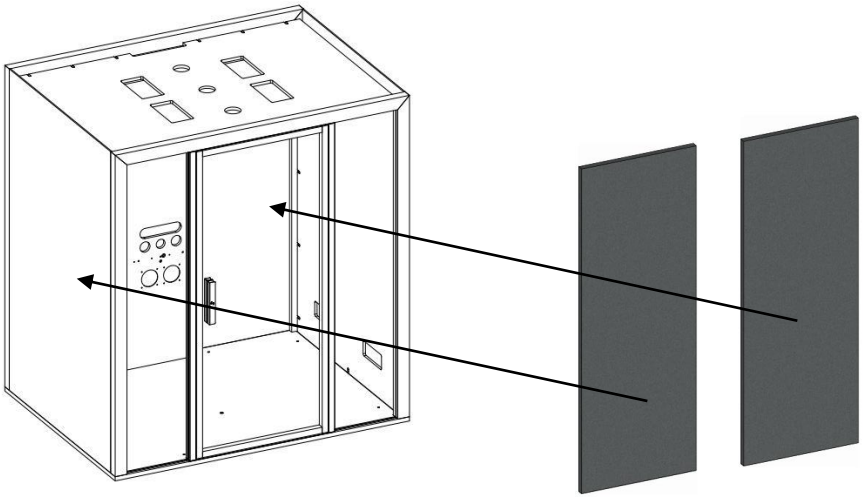

For booths with a full rear panel: Insert and position the fabric covering of the rear panels against the adhesive wall strips.

ASSEMBLY

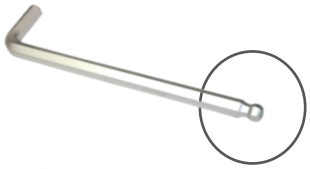

Use the round head hexagon spanner

18

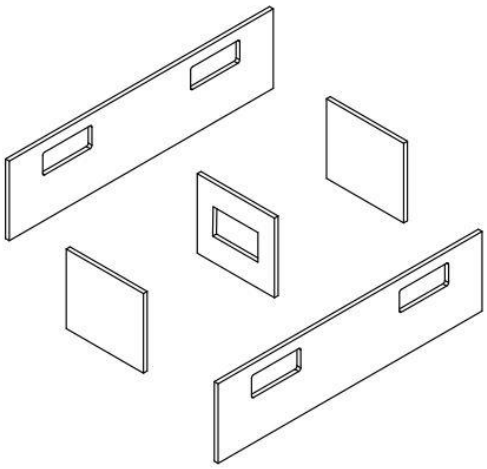

Assemble the bench base in kit

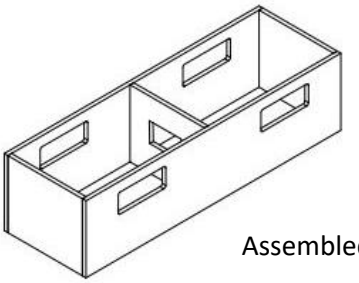

Assembled base

Tighten the ‘cabineo’ to attach the base elements

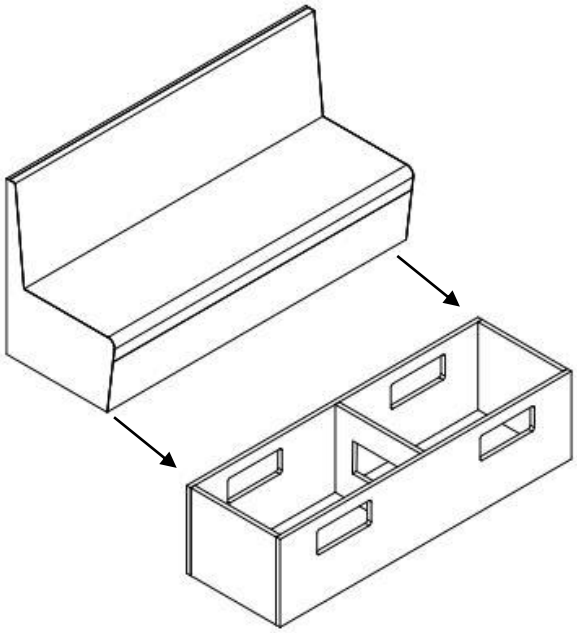

ASSEMBLY

Before installing benches, make sure you clean the glass panels

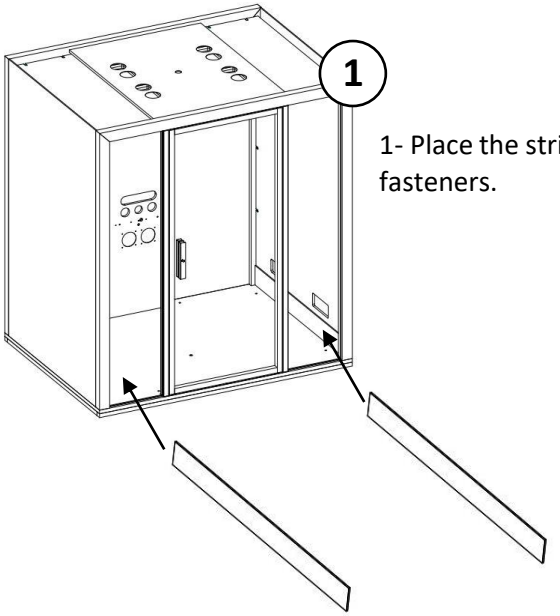

1- Place the strips at the base of the side panels using the velcro fasteners.

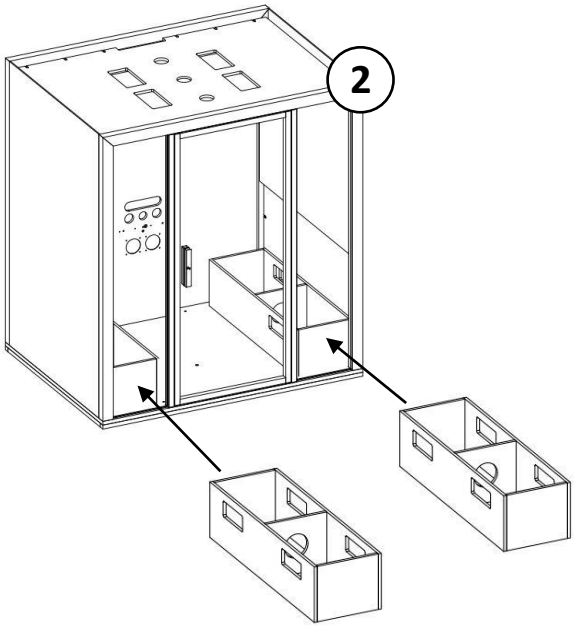

2- Place the bench bases within the booth.

ASSEMBLY

Before installing the benches, make sure you clean the glass panels

19

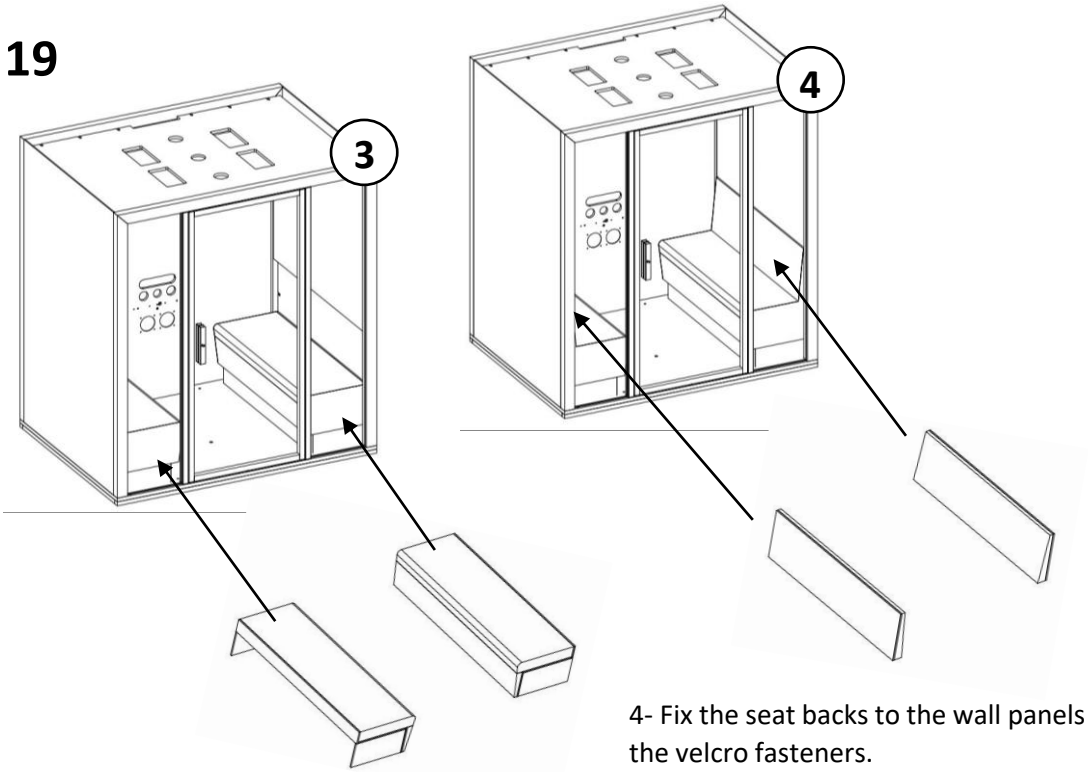

3 - Insert the benches onto the base

4- Fix the seat backs to the wall panels using the velcro fasteners.

20

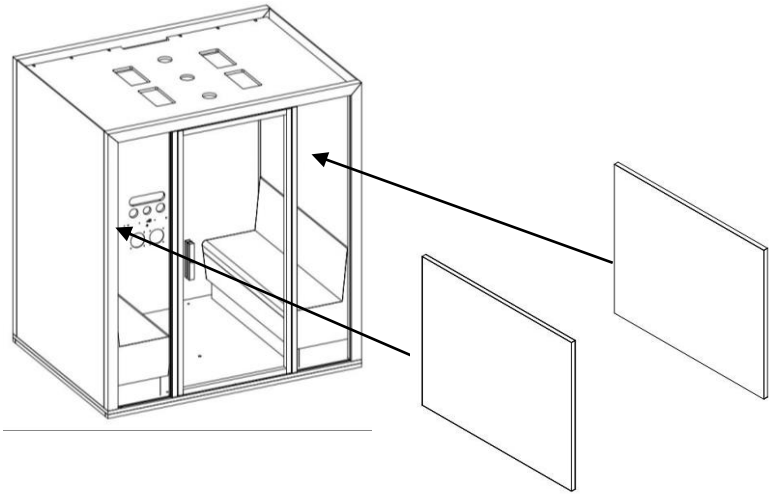

Insert and position the side panel fabric covering

ASSEMBLY

21

Step 1: Place the ceiling cover onto the top of the booth.

TAKE CARE TO INSERT THE RIGHT WAY

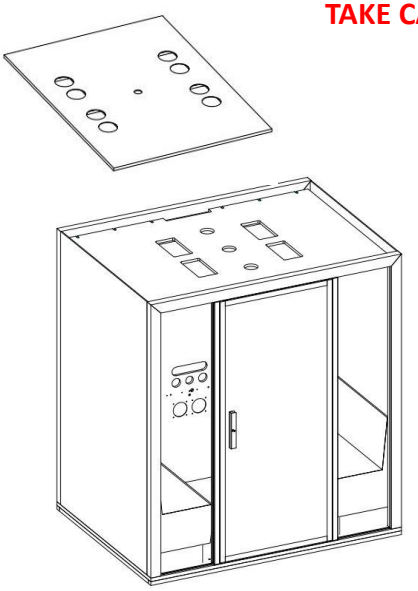

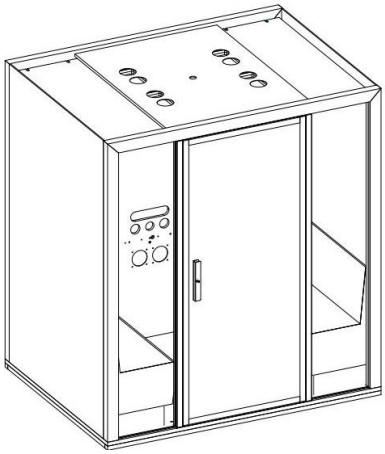

CAUTION: take care to pass the power lead into the space between the column and ceiling cover

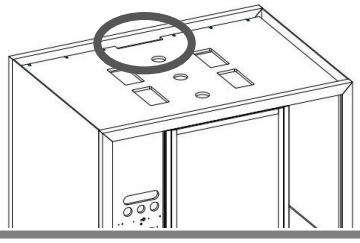

Step 2: Connection

CAUTION: take care to pass the LED spot socket into the false ceiling spotlight.

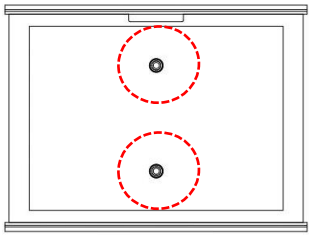

OCCUPANCY SIGNAL OPTION

22

Place the GU10 connector into the area for the occupancy signal.

Connect the red LED spot light to the GU10 and place this in the correct hole.

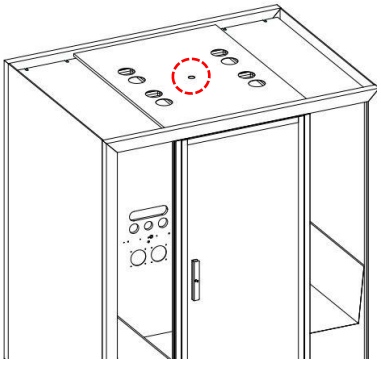

ASSEMBLY OF TABLE DUO/QUATTRO

A

23

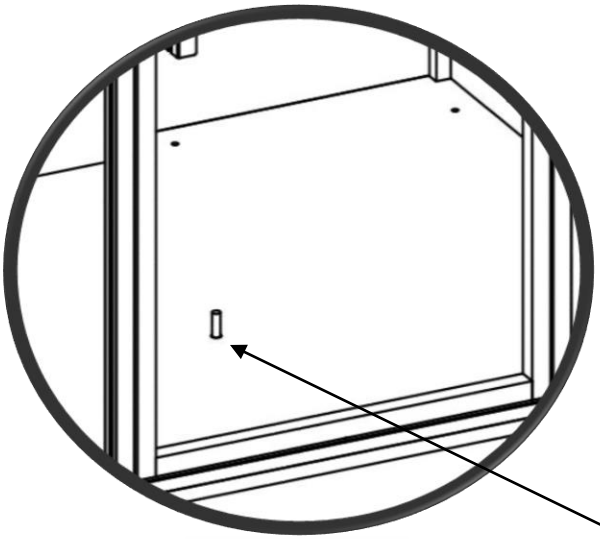

Step 1:
Screw the threaded rod marked **A** into the base insert

Step 2:
Fix the support onto the threaded rod

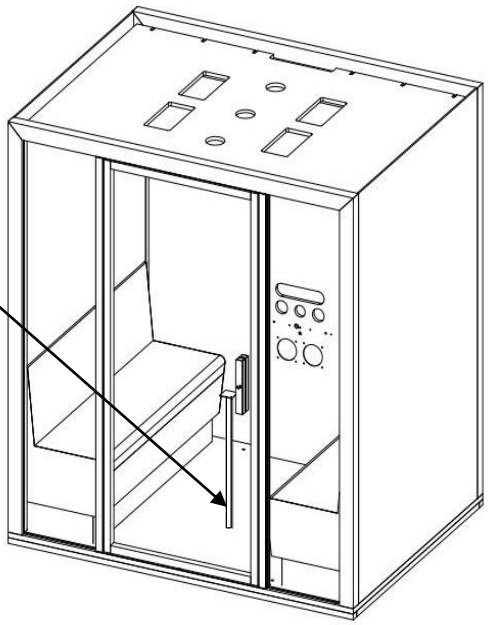

ASSEMBLY

ASSEMBLY OF TABLE DUO/QUATTRO

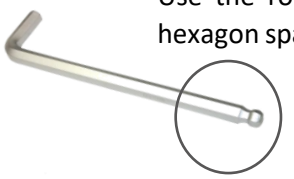

Use the round head hexagon spanner

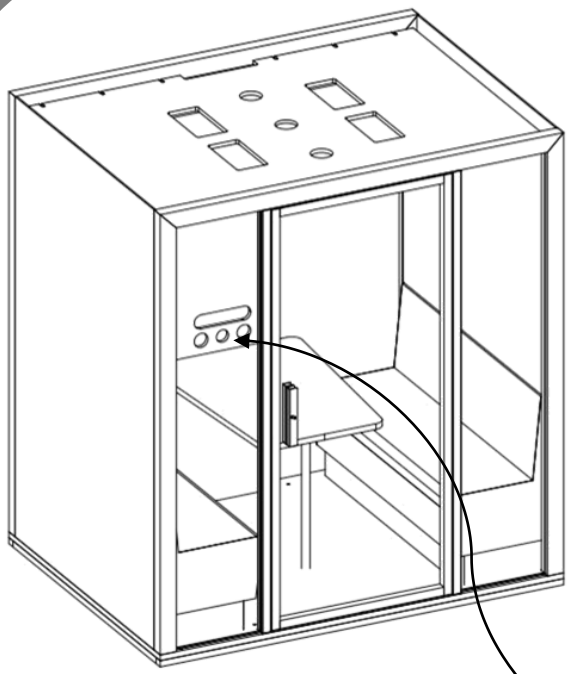

Step 3:
Place the table onto the support.

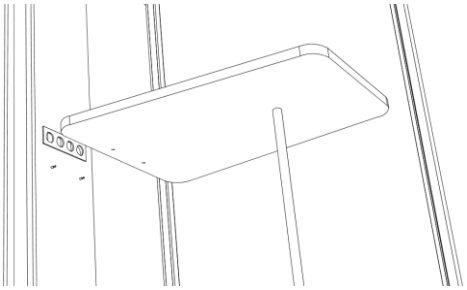

Step 4:
Insert the table into the column and tighten the assembly.

Step 5:
Screw the support into the table

X4

D

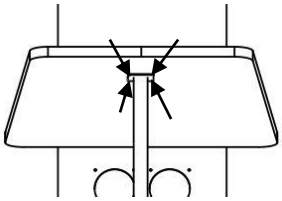

Tighten the 'cabineo' to attach the table elements

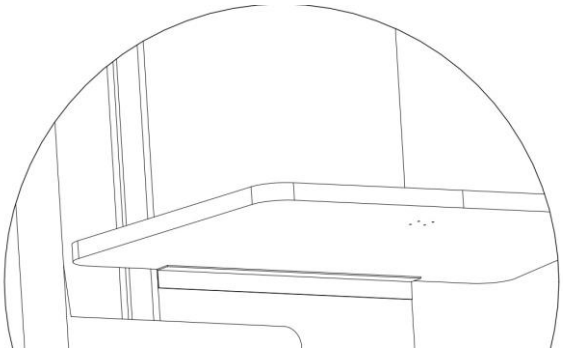

Step 6:
Attach the corner section along the length of the column using screws. **E** into the table and **F** into the column

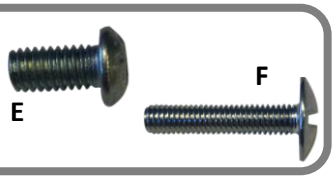

ASSEMBLY

24

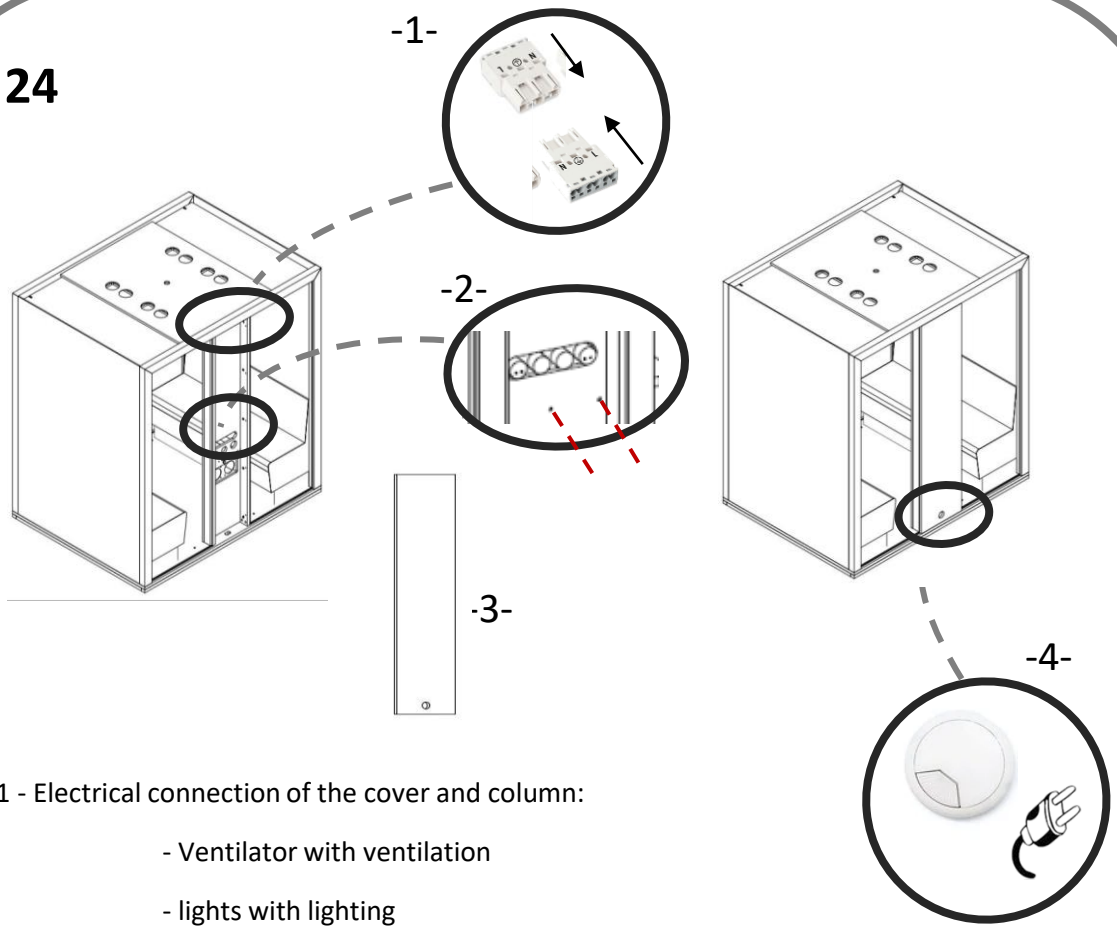

1 - Electrical connection of the cover and column:

- Ventilator with ventilation
- lights with lighting

2 - Tighten the wood screws for the table to the rear of the column

3 - Clip on the rear finishing panel

4 - Pass the power lead into the cable pass to the rear of the booth

ASSEMBLY

WELL DONE, assembly is now complete!

- Be sure to clean the booth
- Be sure to clean the door

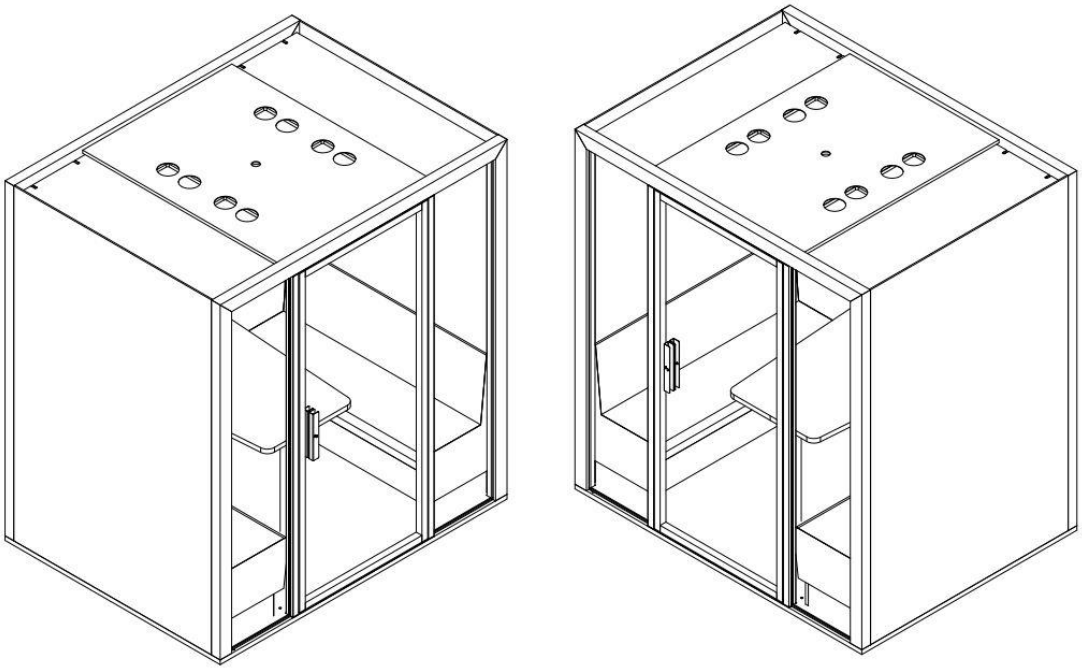

NOMENCLATURE

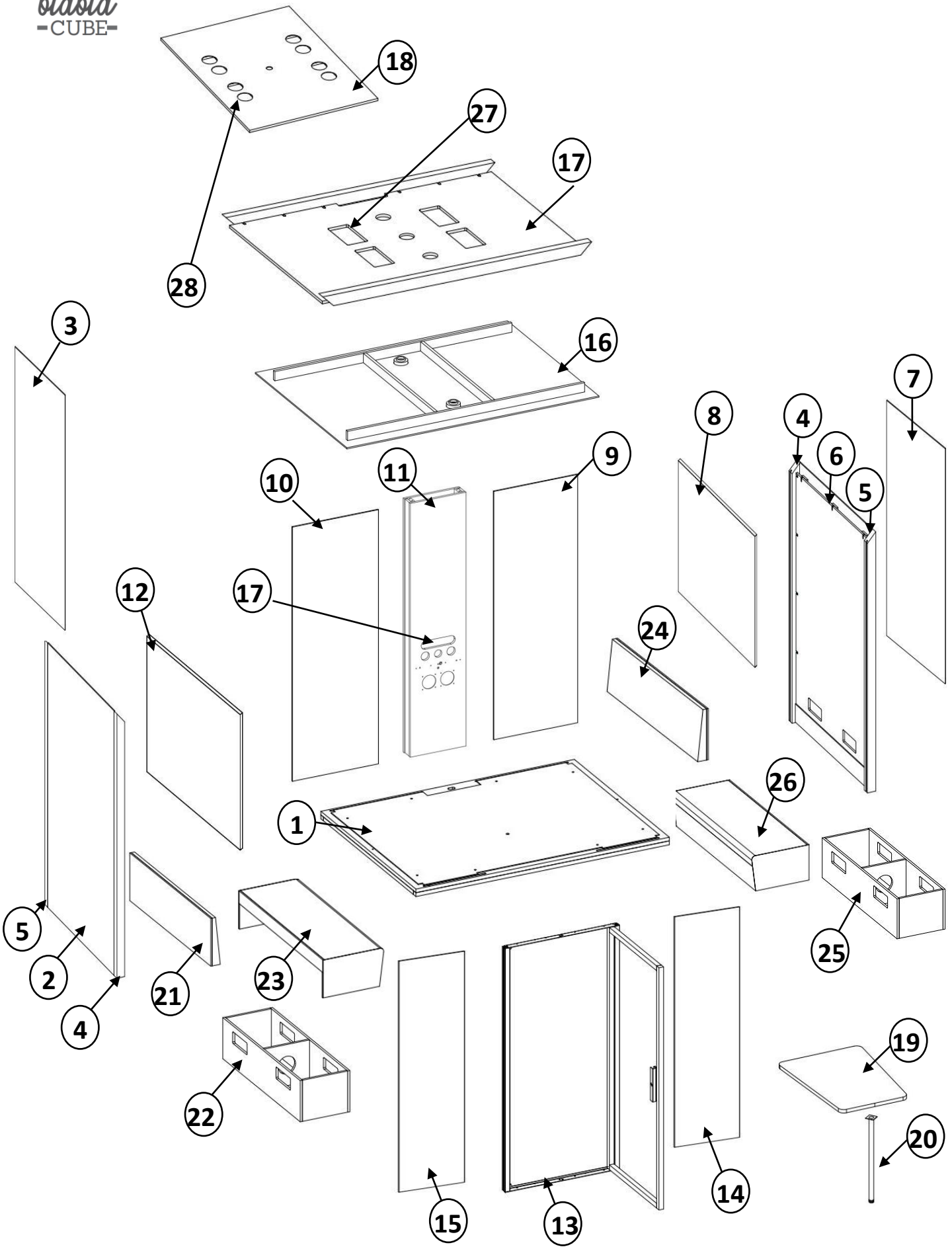

AFTER SALES SERVICE

SOLO	DUO	QUATTRO	XL

Part no.	Part name	Part no.	Part name	Quantity		Finish
1	BASE	16	FALSE CEILING			
2	LEFT SIDE PANEL	17	CEILING			
3	OUTSIDE LEFT PANEL	18	CEILING COVER			
4	4 RIGHT UPRIGHT	19	TABLE			
5	4 LEFT UPRIGHT	20	TABLE SUPPORT			
6	RIGHT SIDE PANEL	21	LEFT HIGH BENCH			
7	OUTSIDE RIGHT PANEL	22	LEFT HIGH BENCH			
8	FABRIC COVERING INSIDE RIGHT	23	LEFT HIGH BENCH			
9	RIGHT REAR PANEL	24	RIGHT HIGH BENCH			
10	LEFT REAR PANEL	25	RIGHT BENCH BASE			
11	COLUMN	26	RIGHT BENCH SEAT			
12	INSIDE LEFT FABRIC COVER	27	LED SPOT LIGHT			
13	DOOR FRAME	28	VENTILATOR			
14	FRONT RIGHT GLASS PANEL	29	4 SOCKET UNIT			
15	FRONT LEFT GLASS PANEL					

For any after-sales service queries, please complete the above table and circle the part which requires replacement.
For proper processing, any after-sales service request should be accompanied by a photo sent to serviceclient@blabla-cube.com

ASSEMBLY REPORT:

(to be completed for each booth assembled)

Booth number: *(located on the label beneath the table)*		
Adjustments undertaken:	- Level of the booth - Door adjusted - Magnet power adjusted	Tick if OK
Operation inspections:	- Lighting OK - Detector OK - Ventilation OK	Tick if OK
Booth clean:	- Glass panels cleaned - Booth vacuum cleaned - Waste removed - Labels removed	Tick if OK
After-sales service comments: *(describe in detail along with photo)*		
Comment:		
Name of assembler	Signature	Date

Send a photo of this report + 2 product photos to:
serviceclient@blabla-cube.com
If you have any questions please call us on 04 75 78 44 44

blabla

- CUBE -

www.blabla-cube.com
contact@blabla-cube.com
ZA de la Plaine de Clairac
35 Rue Louis Blériot
26760 - BEAUMONT-LÈS-VALENCE – FRANCE
TEL : +33.04.75.78.44.44

JANUARY 2023